FIG. 8

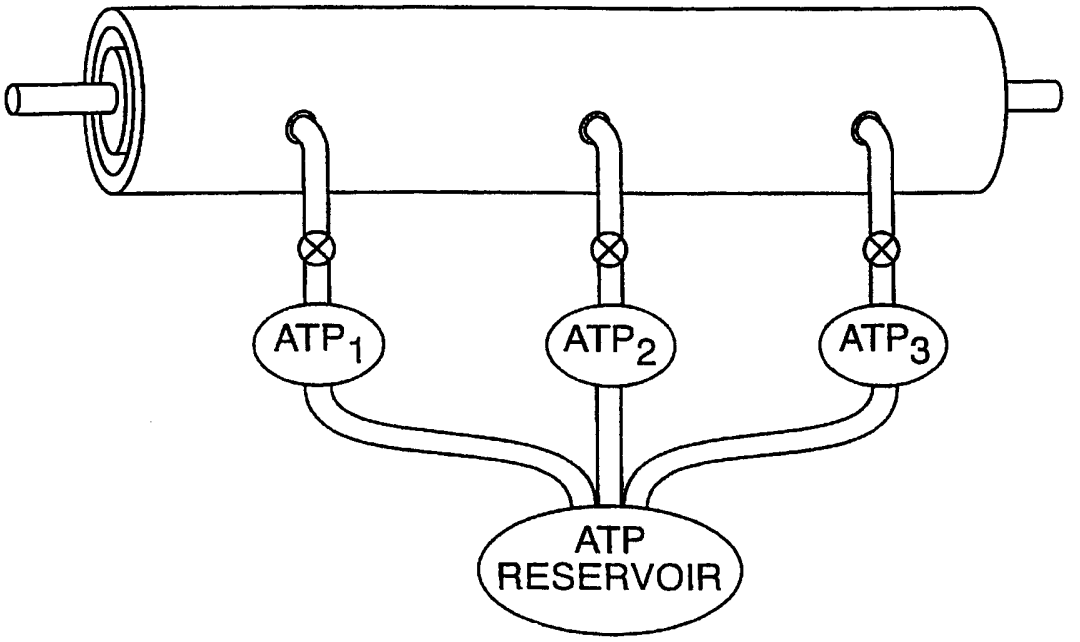
ATP1
ATP2
ATP3
ATP
RESERVOIR

FIG. 9

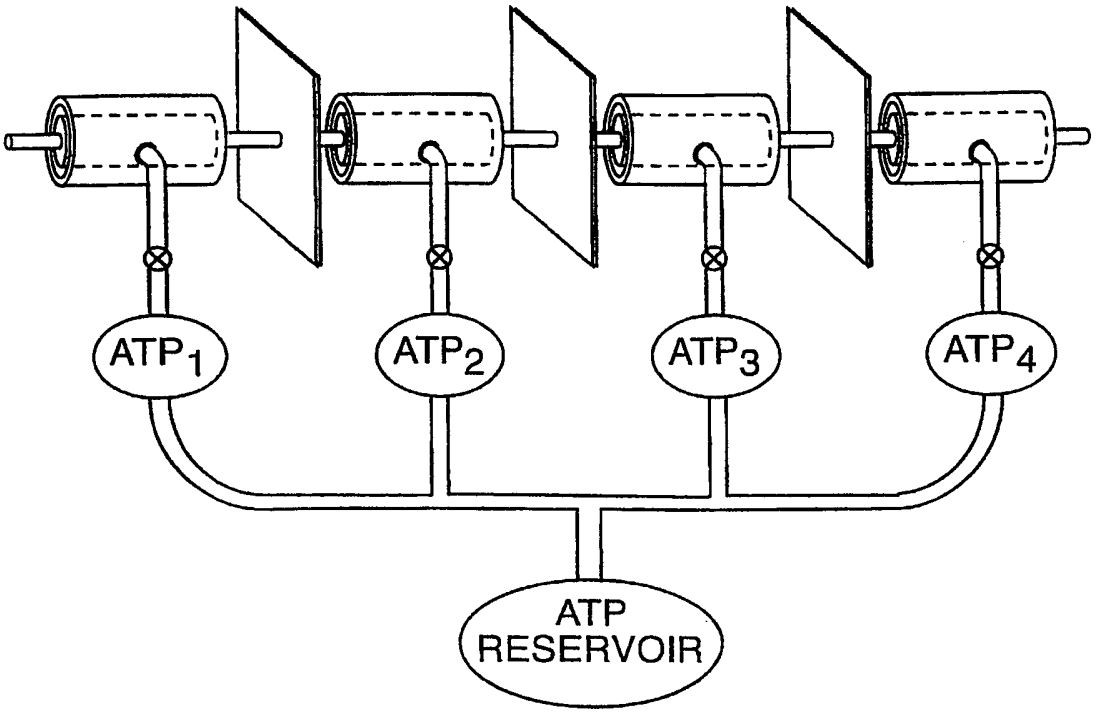
ATP1
ATP2
ATP3
ATP4
ATP
RESERVOIR